Internal Roller Burnishing Tools

Type DX For Cylindrical Holes

Through hole between Ø5 - Ø350 mm
Blind hole between Ø6 - Ø350 mm

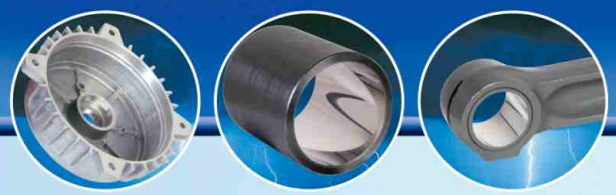

Application

YAMASA DX type tools are used for the aim of burnishing the cylindrical holes that have an open and closed end. The tools provide as well as surface hardness and calibration (measurement accuracy) beside of burnishing. Because of the high processing power and speed ability it provides time saving. These are the preference causes for the serial production.

Blind hole

Through hole

There are three types of YAMASA DX burnishing tools according to the process type :

1) Through Hole Automatic (Self) Feeding

These burnishing tools process the holes that have an open end. The tools provide own feeding speed which is needed while it is processing the workpiece. Feeding occurs free from the machine.

2) Through Hole Machine Feeding

These burnishing tools process the holes that have an open end. While the tools process the workpiece, the machine provides feeding speed which is needed.

3) Blind hole Machine Feeding

These burnishing tools process stepped or fully closed holes up to end. While the tools process the workpiece, the machine provides feeding speed which is needed.

The tool or the workpiece can be turned with the speed of 250 m/min. The machine feeding speed is possible from 0,1 mm/rev. to 0,3 mm/rev. for per roller.

Through hole

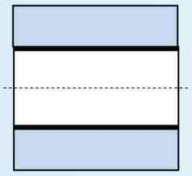

Blind hole

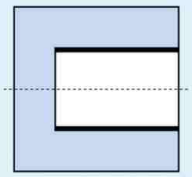

Stepped hole

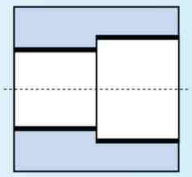

Technical Features

The tools are adjusted. The adjustment capacity is changing according to the diameter and types between 0,25 mm and 1 mm. The tools have an adjustment mechanism which gives the possibility to adjust very high precision measurements. For Ø5 - Ø80 mm tools, adjustment precision is 0,0025 mm and for bigger than Ø80 mm tools, adjustment precision is 0,0050 mm. YAMASA DX type roller burnishing tools can process the cylindrical holes up to H8 tolerance with a single adjustment. These tools are capable to process all kinds of metallic materials with 1400 N/mm² tensile strength and hardness up to max. 42-45 HRC. Tools work by turning to right. Either tool or workpiece may turn. These tools can be used on universal or CNC lathes, machining centers, drilling machines, milling machines or other machines which process by turning. The tools can be fixed to all machines easily and practically. Tools have rather a long life. It is possible to use the tools for a long time without size change due to abrasion.

Tool Body	Diameter Range ØD	Tool Shank		a	b	c	g	Remarks
		Morse Taper	Cylindrical (Øi x h)					
DX1.1	005-014	MK2	Ø20 h6 x 50	78,5	146	34	1,5	Standart rolling length 50 mm. Rolling length can be extended upon special order.
DX1.2	015-021				146		2	
	022-031				139		2,5	
DX1.3	032-034				139		3	Unlimited rolling length.
	035-049				142,5		3	
DX2	050-080	MK3	Ø25 h6 x 56	98	177,5	48	3,5	
DX3	081-160	MK4	Ø32 h6 x 60	123	195	62	4	
DX4	161-350	MK5	Ø40 h6 x 80	155,5	272,5	89	4,5	

All Dimensions in mm.

Tool Structure

YAMASA DX burnishing tools consist of a body and a roller head. The tool body has a precision adjustment mechanism. Cage, cone and rollers are the parts of the roller head. The roller heads fitting in to the same body can be changed. The tool shank may be morse taper or cylindrical. The tools, which are bigger than Ø34 have an unlimited rolling length, for the tools which are smaller than Ø35 exist standard rolling lengths (see table side). For special orders, tools with longer rolling lengths can be produced.

Samples of application

• Connecting rod • Brake cylinder • Valve body • Joints • Pneumatic cylinder • Hole of piston housing • Cardan shafts • Locker arms • Gas valve • Gears • Air hammer parts • Solenoid valve • Shock absorber • Carburetors • Ring bushings • Pipes • Pistons • Master cylinders • Motor stators • Cylinders etc.

Order Requirements

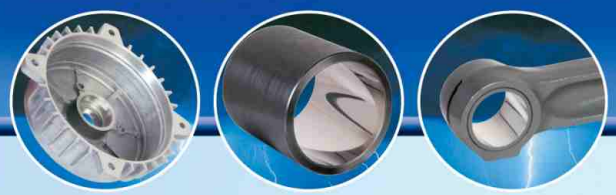

YAMASA DX Type burnishing tools can process the various diameters in order to the adjustability specification. For example: DX1.2-025,00-1-50-MK2 type burnishing tool having a nominal size of Ø25,00 mm is capable to process all sizes between Ø24,90 mm and Ø25,90 mm.

YAMASA, DX type tools are produced in special diameters and sizes upon request. In addition, the tools with the special rolling length can also be produced.

You can use the information above to select the proper tool. If you want to take help for the tool selection, you can fill out the tool option form and send to us or to one of the related zone representation. So we can do proper tool selection for you.

Tool Selection

1-Tool Body Selection

At sight to the table, select the body number proper to the tool diameter.

2-Diameter Selection

Define the diameter accurately which you will process (for example 25,40 ...).

3-Process Type Selection

Select the process type according to machine and workpiece.
1: Automatic (self) feeding for through holes
2: Machine feeding for through holes
3: Machine feeding for blind holes

Order Sample

DX1.2-022,00-2-50-MK2
DX1.2 : Tool body
022,00 : Diameter (Ø)
2 : Process type
50 : Rolling length
MK2 : Shank

4-Rolling Length Selection

Define the rolling length which is proper for the workpiece. It doesn't need to be stated for bigger than Ø34 mm diameter because they have unlimited rolling length but it must be stated smaller than Ø35 mm diameter. Standard rolling length is 50 mm for smaller than Ø35. For these diameters other rolling length options are 100, 150, 200, 250, 300 mm. For the diameters of smaller than Ø35 more longer rolling length demands will be considered specifically.

5-Tool Shank Selection

Prefer proper shank to your machine.
MK : Morse Taper Shank
ZS : Cylindrical Shank

Internal Roller Burnishing Tools

Type DX For Cylindrical Holes

Through hole between Ø5 - Ø14 mm
Blind hole between Ø6 - Ø14 mm

Recommended Machining Parameters

Burnishing allowance : ~ +0,01 to +0,02 mm
Pre-machining : Reaming or lathening
Pre-machining roughness : R_z = 5-15 µm
Coolant : Oil emulsion or cutting oil

Diameter Range (mm)	Revolution (rev/min)	Feeding (mm/rev)
5,00-7,00	1000	0.45
8,00-14,00	1000	0.60

DX1.1-008,00-3-100-MK2

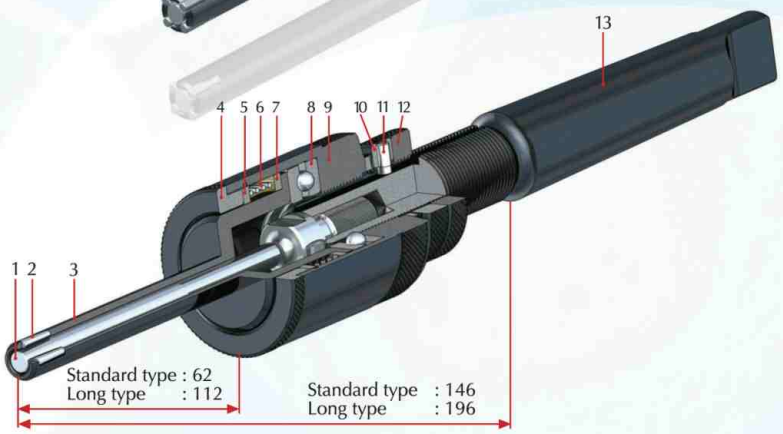

1 Cone
2 Roller
3 Cage
4 Housing nut
5 Thrust ring
6 Spring
7 Thrust ring
8 Ball Bearing
9 Housing
10 Adjustment gear
11 Pin
12 Adjustment nut lock
13 Shank

STANDARD TYPE

Order Sample								Setting Range			Roller		
Tool Body	Diameter	Process Type: Through AF	Through MF	Blind MF	Rolling Length	Tool Shank: Morse Taper	Cylindrical	Through AF	Through MF	Blind MF	Roller Number: Through	Blind	Quantity Piece
DX1.1	005,00	1	2	3	50	MK2	ZS 20 Ø20 h6 x 50	-0,05 +0,20	-0,05 +0,20	-0,05 +0,20	500115	-	3
	006,00										500100	500308	
	007,00												
	008,00							-0,10 +0,40	-0,10 +0,40	-0,05 +0,40			4
	009,00										500108	500300	
	010,00												
	011,00												
	012,00										500102	500301	
	013,00												
	014,00												

LONG TYPE

Order Sample								Setting Range			Roller		
Tool Body	Diameter	Process Type: Through AF	Through MF	Blind MF	Rolling Length	Tool Shank: Morse Taper	Cylindrical	Through AF	Through MF	Blind MF	Roller Number: Through	Blind	Quantity Piece
DX1.1	006,00	1	2	3	100	MK2	ZS 20 Ø20 h6 x 50	-0,05 +0,20	-0,05 +0,20	-0,05 +0,20	500100	500308	3
	007,00												
	008,00							-0,10 +0,40	-0,10 +0,40	-0,05 +0,40			4
	009,00										500108	500300	
	010,00												
	011,00												
	012,00										500102	500301	
	013,00												
	014,00												

All Dimensions in mm. AF: Automatic Feeding (Self Feeding) MF: Machine Feeding

Internal Roller Burnishing Tools

Type DX For Cylindrical Holes

Through hole between Ø15 - Ø21 mm
Blind hole between Ø15 - Ø21 mm

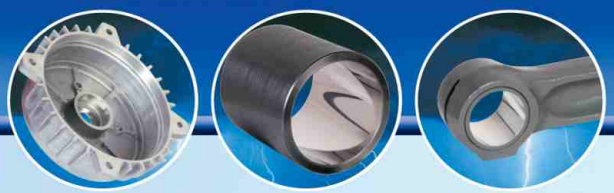

Recommended Machining Parameters

Burnishing allowance : ~ +0,01 to +0,02 mm
Pre-machining : Reaming or lathening
Pre-machining roughness : R_z = 5-15 µm
Coolant : Oil emulsion or cutting oil

Diameter Range (mm)	Revolution (rev/min)	Feeding (mm/rev)
15,00-21,00	1000	0.75

DX1.2-015,00-3-100-MK2

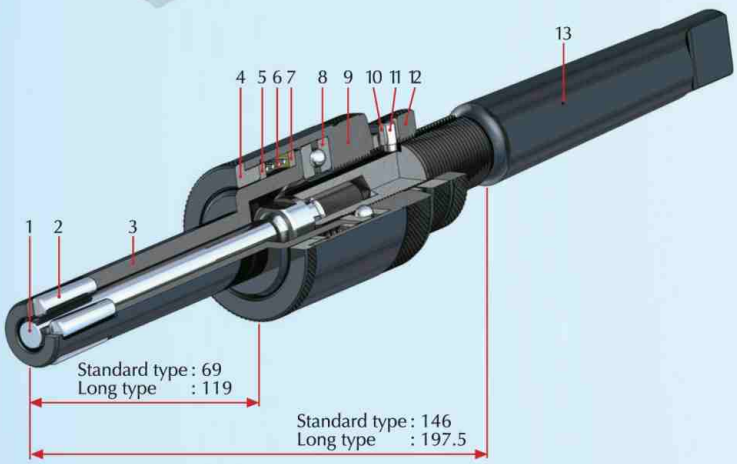

1 Cone
2 Roller
3 Cage
4 Housing nut
5 Thrust ring
6 Spring
7 Thrust ring
8 Ball Bearing
9 Housing
10 Adjustment gear
11 Pin
12 Adjustment nut lock
13 Shank

STANDARD TYPE

Order Sample								Setting Range			Roller		
Tool Body	Diameter	Process Type: Through AF	Through MF	Blind MF	Rolling Length	Tool Shank: Morse Taper	Tool Shank: Cylindrical	Through AF	Through MF	Blind MF	Roller Number: Through	Roller Number: Blind	Quantity Piece
DX1.2	015,00	1	2	3	50	MK2	ZS 20 Ø20 h6 x 50	-0,10 +0,90	-0,10 +0,40	-0,05 +0,40	500111	500310	5
	016,00												
	017,00												
	018,00												
	019,00										500112	500311	
	020,00												
	021,00												

LONG TYPE

Order Sample								Setting Range			Roller		
Tool Body	Diameter	Process Type: Through AF	Through MF	Blind MF	Rolling Length	Tool Shank: Morse Taper	Tool Shank: Cylindrical	Through AF	Through MF	Blind MF	Roller Number: Through	Roller Number: Blind	Quantity Piece
DX1.2	015,00	1	2	3	100	MK2	ZS 20 Ø20 h6 x 50	-0,10 +0,90	-0,10 +0,40	-0,05 +0,40	500111	500310	5
	016,00												
	017,00												
	018,00												
	019,00										500112	500311	
	020,00												
	021,00												

All Dimensions in mm. AF: Automatic Feeding (Self Feeding) MF: Machine Feeding

Through hole between Ø22 - Ø31 mm
Blind hole between Ø22 - Ø31 mm

Recommended Machining Parameters

Burnishing allowance : ~ +0,02 to +0,03 mm
Pre-machining : Reaming or lathening
Pre-machining roughness : R_z = 5-20 µm
Coolant : Oil emulsion or cutting oil

Diameter Range (mm)	Revolution (rev/min)	Feeding (mm/rev)
22,00-31,00	1000	0.75

1 Cone
2 Roller
3 Cage
4 Housing nut
5 Thrust ring
6 Spring
7 Thrust ring
8 Ball Bearing
9 Housing
10 Adjustment gear
11 Pin
12 Adjustment nut lock
13 Shank
14 Screw
15 Cage Sleeve

9

STANDARD TYPE

Order Sample								Setting Range			Roller		
Tool Body	Diameter	Process Type			Rolling Length	Tool Shank		Through		Blind	Roller Number		Quantity
		Through		Blind									
		AF	MF	MF		Morse Taper	Cylindrical	AF	MF	MF	Through	Blind	Piece
DX1.2	022,00	1	2	3	50	MK2	ZS 20 Ø20 h6 x 50	-0,10 +0,90	-0,10 +0,40	-0,05 +0,40	500112	500311	5
	023,00												
	024,00												
	025,00										500113	500312	
	026,00												
	027,00												
	028,00										500109	500307	
	029,00												
	030,00												
	031,00												

LONG TYPE

Order Sample								Setting Range			Roller		
Tool Body	Diameter	Process Type			Rolling Length	Tool Shank		Through		Blind	Roller Number		Quantity
		Through		Blind									
		AF	MF	MF		Morse Taper	Cylindrical	AF	MF	MF	Through	Blind	Piece
DX1.2	022,00	1	2	3	100	MK2	ZS 20 Ø20 h6 x 50	-0,10 +0,90	-0,10 +0,40	-0,05 +0,40	500112	500311	5
	023,00												
	024,00												
	025,00										500113	500312	
	026,00												
	027,00												
	028,00										500109	500307	
	029,00												
	030,00												
	031,00												

All Dimensions in mm. AF: Automatic Feeding (Self Feeding) MF: Machine Feeding

Internal Roller Burnishing Tools

Type DX For Cylindrical Holes

Through hole between Ø32 - Ø34 mm
Blind hole between Ø32 - Ø34 mm

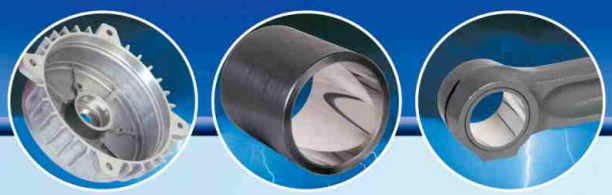

Recommended Machining Parameters

Burnishing allowance : ~ +0,02 to +0,03 mm
Pre-machining : Reaming or lathening
Pre-machining roughness : R_z = 5-30 µm
Coolant : Oil emulsion or cutting oil

Diameter Range (mm)	Revolution (rev/min)	Feeding (mm/rev)
32,00-34,00	950	0.75

DX1.3-032,00-3-100-MK2

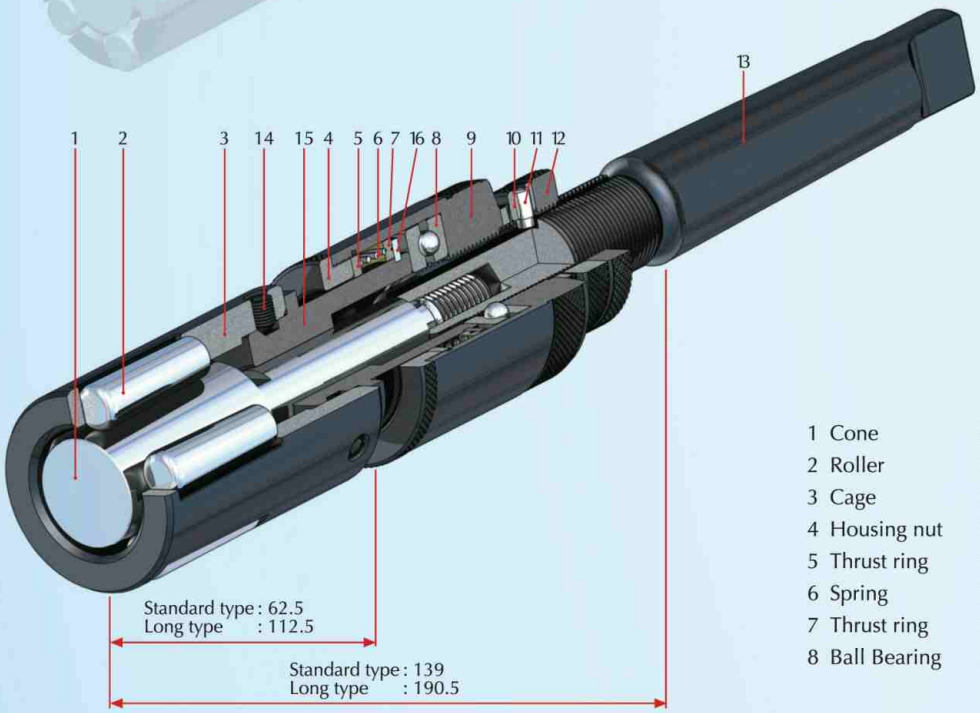

1 Cone
2 Roller
3 Cage
4 Housing nut
5 Thrust ring
6 Spring
7 Thrust ring
8 Ball Bearing
9 Housing
10 Adjustment gear
11 Pin
12 Adjustment nut lock
13 Shank
14 Screw
15 Cage sleeve
16 Locking Ring

STANDARD TYPE

Order Sample								Setting Range			Roller		
Tool Body	Diameter	Process Type			Rolling Length	Tool Shank		Through		Blind	Roller Number		Quantity
		Through		Blind									
		AF	MF	MF		Morse Taper	Cylindrical	AF	MF	MF	Through	Blind	Piece
DX1.3	032,00 033,00 034,00	1	2	3	50	MK2	ZS 20 Ø20 h6 x 50	-0,10 +0,90	-0,10 +0,40	-0,05 +0,40	500109	500307	5

LONG TYPE

Order Sample								Setting Range			Roller		
Tool Body	Diameter	Process Type			Rolling Length	Tool Shank		Through		Blind	Roller Number		Quantity
		Through		Blind									
		AF	MF	MF		Morse Taper	Cylindrical	AF	MF	MF	Through	Blind	Piece
DX1.3	032,00 033,00 034,00	1	2	3	100	MK2	ZS 20 Ø20 h6 x 50	-0,10 +0,90	-0,10 +0,40	-0,05 +0,40	500109	500307	5

All Dimensions in mm. AF: Automatic Feeding (Self Feeding) MF: Machine Feeding

Through hole between Ø35 - Ø49 mm
Blind hole between Ø35 - Ø49 mm

Recommended Machining Parameters

Burnishing allowance : ~ +0,02 to +0,03 mm
Pre-machining : Reaming or lathening
Pre-machining roughness : R_z = 5-30 µm
Coolant : Oil emulsion or cutting oil

Diameter Range (mm)	Revolution (rev/min)	Feeding (mm/rev)
35,00-40,00	800	0.90
41,00-49,00	650	0.90

DX1.3-040,00-3-U-MK2

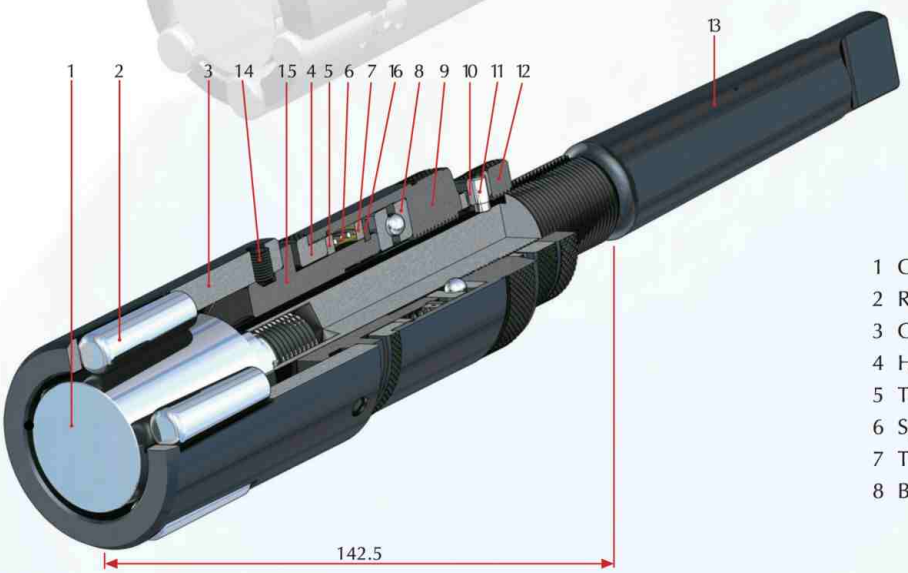

1 Cone
2 Roller
3 Cage
4 Housing nut
5 Thrust ring
6 Spring
7 Thrust ring
8 Ball Bearing
9 Housing
10 Adjustment gear
11 Pin
12 Adjustment nut lock
13 Shank
14 Screw
15 Cage sleeve
16 Locking ring

STANDARD TYPE

Order Sample								Setting Range			Roller		
Tool Body	Diameter	Process Type: Through AF	Process Type: Through MF	Process Type: Blind MF	Rolling Length	Tool Shank: Morse Taper	Tool Shank: Cylindrical	Through AF	Through MF	Blind MF	Roller Number: Through	Roller Number: Blind	Quantity Piece
DX1.3	035,00	1	2	3	UNLIMITED	MK2	ZS 20 Ø20 h6 x 50	-0,10 +0,90	-0,10 +0,40	-0,05 +0,40	500109	500307	6
	036,00												
	037,00												
	038,00												
	039,00												
	040,00												
	041,00												
	042,00												
	043,00												
	044,00												
	045,00												
	046,00												
	047,00												
	048,00												
	049,00												

All Dimensions in mm. AF: Automatic Feeding (Self Feeding) MF: Machine Feeding

Internal Roller Burnishing Tools

Type DX For Cylindrical Holes

Through hole between Ø50 - Ø160 mm
Blind hole between Ø50 - Ø160 mm

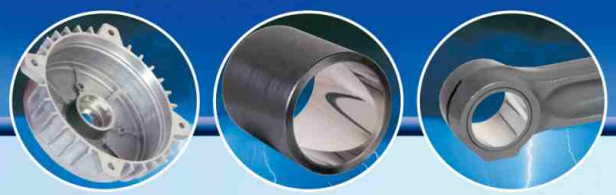

Recommended Machining Parameters

Diameter Range (mm)	Revolution (rev/min)	Feeding (mm/rev)
50,00-60,00	530	1.20
61,00-70,00	450	1.20
71,00-80,00	400	1.20
81,00-90,00	350	1.20
91,00-100,00	320	1.20
101,00-120,00	260	1.20
121,00-140,00	230	1.50
141,00-150,00	210	1.50
151,00-160,00	200	1.80

Burnishing allowance : ~ +0,02 to +0,03 mm
Pre-machining : Reaming or lathening
Pre-machining roughness : R_z = 5-30 µm
Coolant : Oil emulsion or cutting oil

DX2-060,00-3-U-MK3

1 Cone
2 Roller
3 Cage
4 Housing nut
5 Thrust ring
6 Spring
7 Thrust ring
8 Ball Bearing
9 Housing
10 Adjustment gear
11 Pin
12 Adjustment nut lock
13 Shank
14 Screw
15 Cage sleeve
16 Locking ring
17 Conical ring
18 Screw
19 Wedge

between Ø50-Ø80 mm

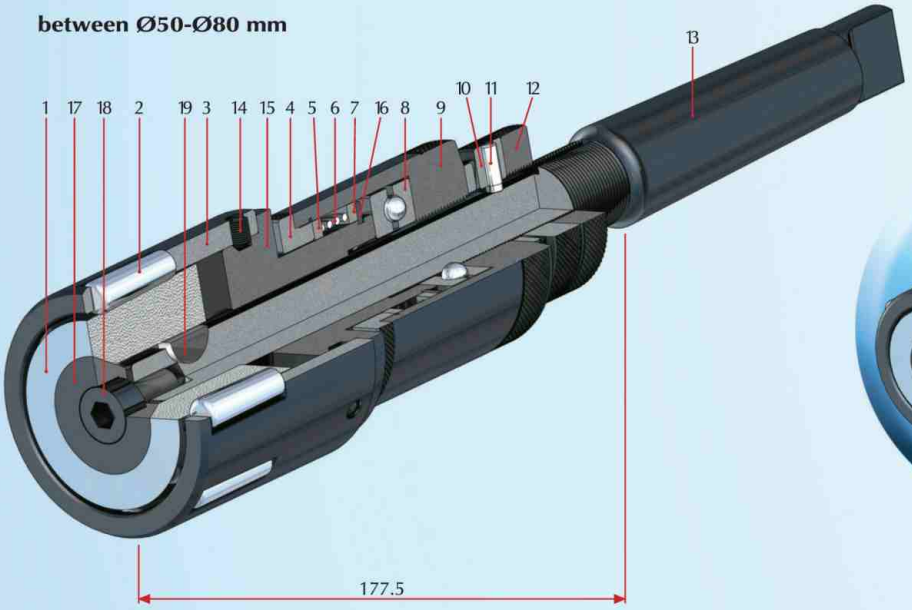

between Ø81-Ø160 mm

STANDARD TYPE

Order Sample								Setting Range			Roller		
Tool Body	Diameter	Process Type			Rolling Length	Tool Shank		Through		Blind	Roller Number		Quantity
		Through		Blind									
		AF	MF	MF		Morse Taper	Cylindrical	AF	MF	MF	Through	Blind	Piece
DX2	050,00	1	2	3	UNLIMITED	MK3	ZS 25 Ø25 h6 x 56	-0,10 +0,90	-0,10 +0,40	-0,05 +0,40	500109	500307	8
	060,00												
	070,00												
	080,00												
DX3	081,00					MK4	ZS 32 Ø32 h6 x 60				500107	500306	
	120,00												
	121,00												10
	150,00												
	151,00												12
	160,00												

All Dimensions in mm. AF: Automatic Feeding (Self Feeding) MF: Machine Feeding

Through hole between Ø161 - Ø350 mm
Blind hole between Ø161 - Ø350 mm

Recommended Machining Parameters

Diameter Range (mm)	Revolution (rev/min)	Feeding (mm/rev)
161,00-170,00	190	1.80
171,00-200,00	160	2.10
201,00-230,00	140	2.40
231,00-260,00	120	2.70
261,00-280,00	110	3.00
281,00-310,00	100	3.30
311,00-330,00	95	3.60
331,00-350,00	90	3.90

Burnishing allowance : ~ +0,02 to +0,03 mm
Pre-machining : Reaming or lathening
Pre-machining roughness : R_z = 5-30 µm
Coolant : Oil emulsion or cutting oil

DX4-170,00-3-U-MK5

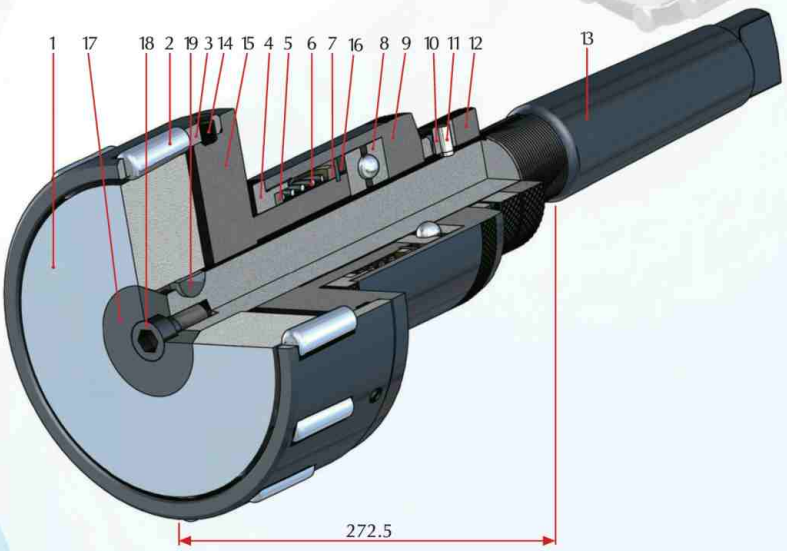

1 Cone
2 Roller
3 Cage
4 Housing nut
5 Thrust ring
6 Spring
7 Thrust ring
8 Ball Bearing
9 Housing
10 Adjustment gear
11 Pin
12 Adjustment nut lock
13 Shank
14 Screw
15 Cage sleeve
16 Locking ring
17 Conical ring
18 Screw
19 Wedge

STANDARD TYPE

Order Sample								Setting Range			Roller		
Tool Body	Diameter	Process Type			Rolling Length	Tool Shank		Through		Blind	Roller Number		Quantity
		Through		Blind									
		AF	MF	MF		Morse Taper	Cylindrical	AF	MF	MF	Through	Blind	Piece
DX4	161	1	2	3	UNLIMITED	MK5	ZS 40 Ø40 h6 x 80	-0,10 +0,90	-0,10 +0,40	-0,05 +0,40	500107	500306	12
	170												
	171												14
	200												
	201												16
	230												
	231												18
	260												
	261												20
	280												
	281												22
	310												
	311												24
	330												
	331												26
	350												

All Dimensions in mm. AF: Automatic Feeding (Self Feeding) MF: Machine Feeding